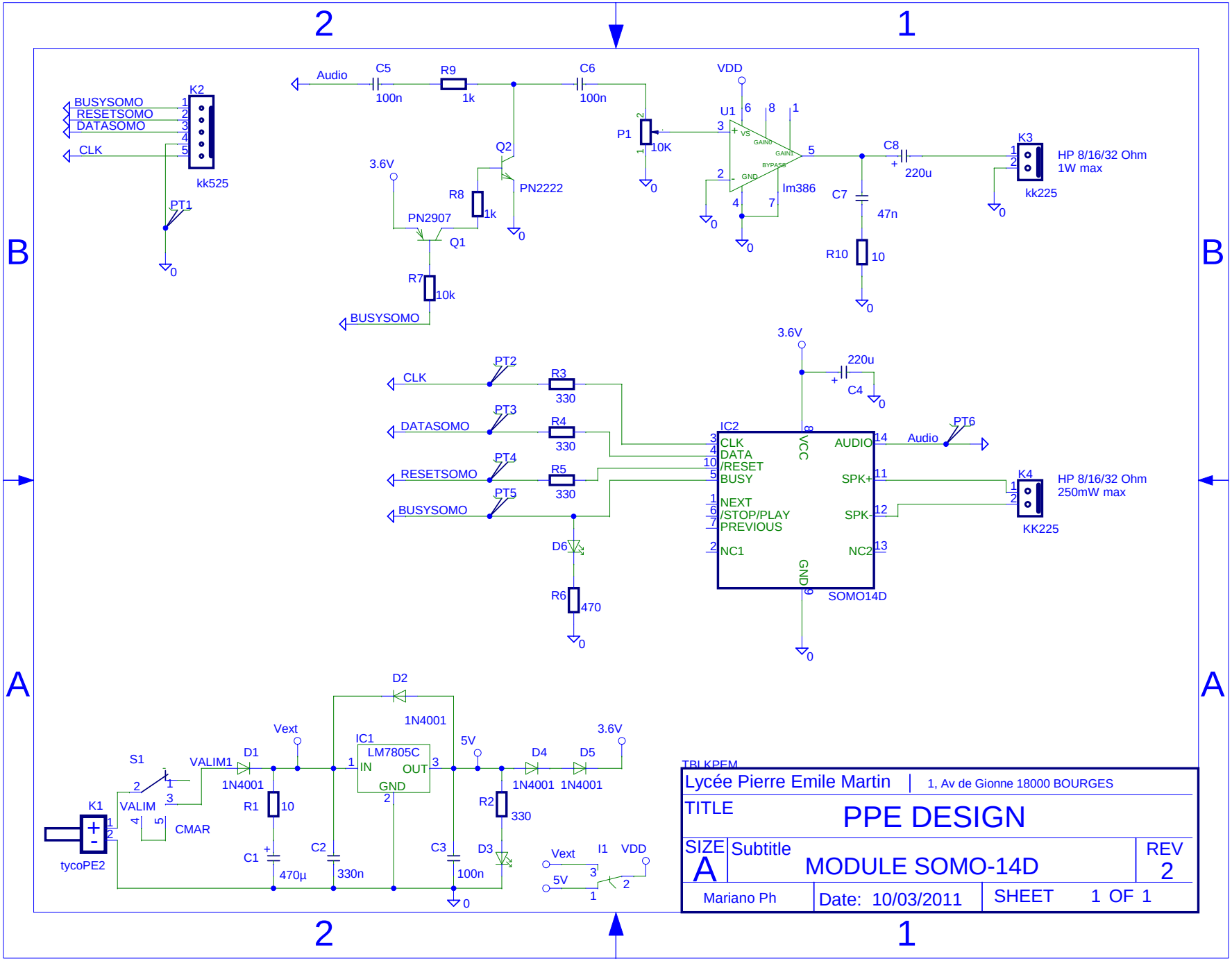
BUSYSOMO
RESETSOMO
DATASOMO
CLK
K2
kk525
PT1
Audio
C5
100n
R9
1k
C6
100n
P1
10K
VDD
U1
Im386
C8
220u
K3
HP 8/16/32 Ohm
1W max
kk225
C7
47n
R10
10
3.6V
Q2
PN2222
R8
1k
PN2907
Q1
R7
10k
BUSYSOMO
3.6V
220u
C4
PT2
CLK
R3
330
PT3
DATASOMO
R4
330
PT4
RESETSOMO
R5
330
PT5
BUSYSOMO
D6
R6
470
IC2
CLK
DATA
/RESET
BUSY
NEXT
/STOP/PLAY
PREVIOUS
NC1
VCC
AUDIO
SPK+
SPK-
NC2
GND
SOMO14D
PT6
Audio
K4
HP 8/16/32 Ohm
250mW max
KK225
D2
1N4001
Vext
IC1
LM7805C
IN
OUT
GND
5V
3.6V
D4
D5
1N4001
1N4001
S1
VALIM1
D1
1N4001
R1
10
VALIM
CMAR
K1
tycoPE2
C1
470µ
C2
330n
C3
100n
R2
330
D3
Vext
I1
VDD
5V
Lycée Pierre Emile Martin
1, Av de Gionne 18000 BOURGES
TITLE
PPE DESIGN
SIZE
A
Subtitle
MODULE SOMO-14D
REV
2
Mariano Ph
Date: 10/03/2011
SHEET 1 OF 1